ORİMAK®

MAKİNA SANAYİ VE TİCARET LTD. ŞTİ.

ORİTEQ®

Q-BOX

Box Cutting

Q-BOX
ORIMAK
ORIMAK

ORİTEQ®

Q-BOX

Box Cutting

INNOVATION IDEA ECOLOGISM

ORİMAK®

ORİMAK®

Q-BOX enables automatically cutting and folding of endless cardboard sheet.

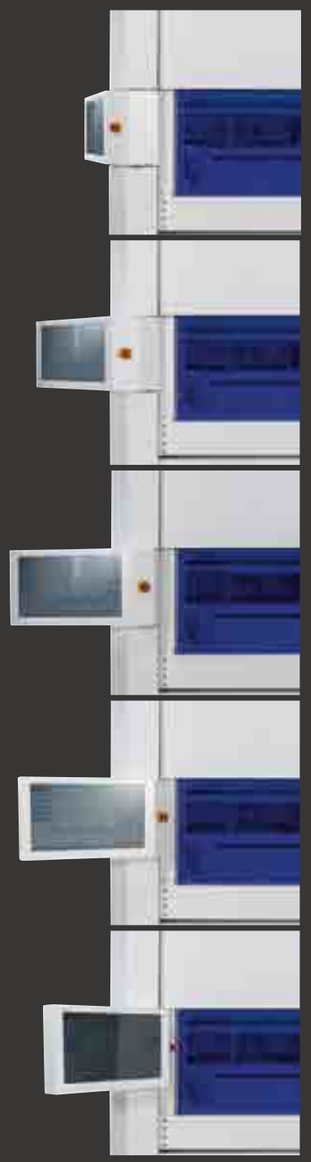

COMPACT SCREEN STRUCTURE

FLEXIBLE WORK

LEFT GUARD OPERATION

RIGHT GUARD OPERATION

HOW EASY TO PRODUCE BOXES WITH Q-BOX?

- All you have to do is to select a pre-programmed box type on the touch screen panel and enter the inside box dimensions. All settings are made automatically in less than a minute by servo-controlled adjustment mechanism. There is no manual settings on the machine.

RIGHT GUARD OPERATION

LEFT GUARD OPERATION

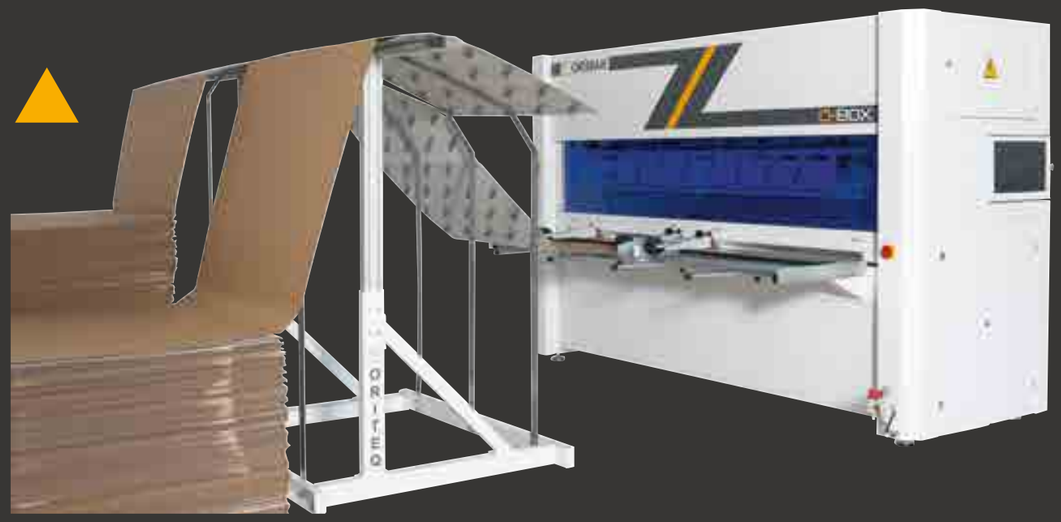

WORKING ON BOTH SIDES AT THE SAME TİME

OPTIONS

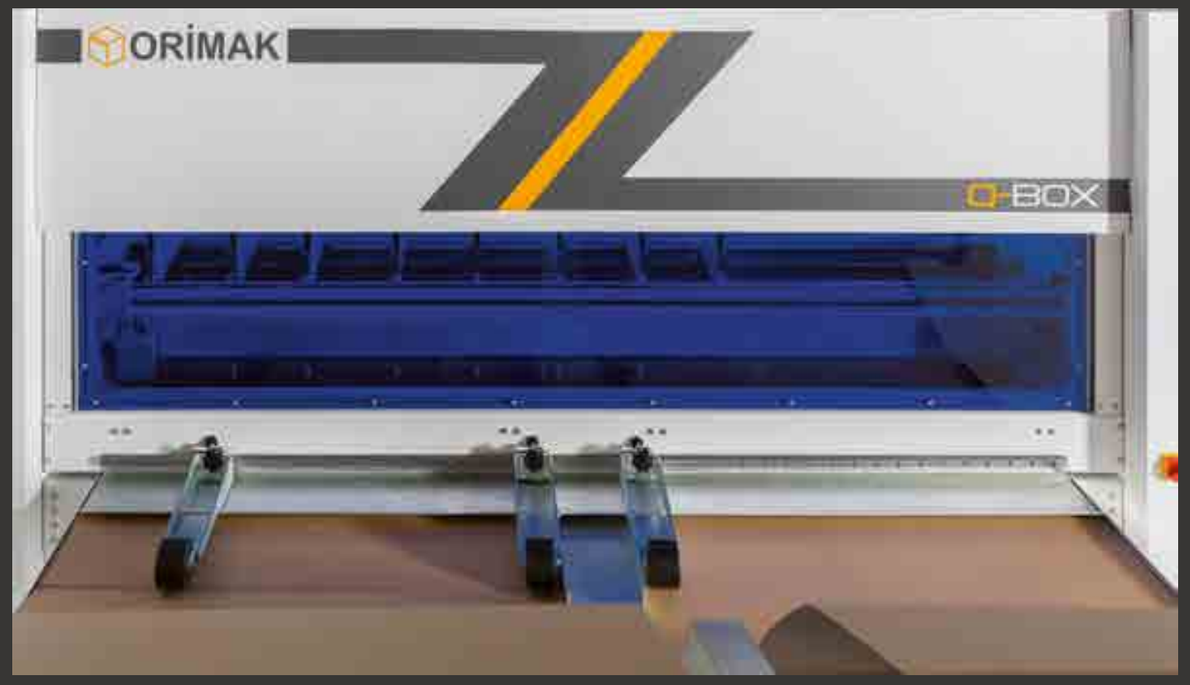

SHEET WORK

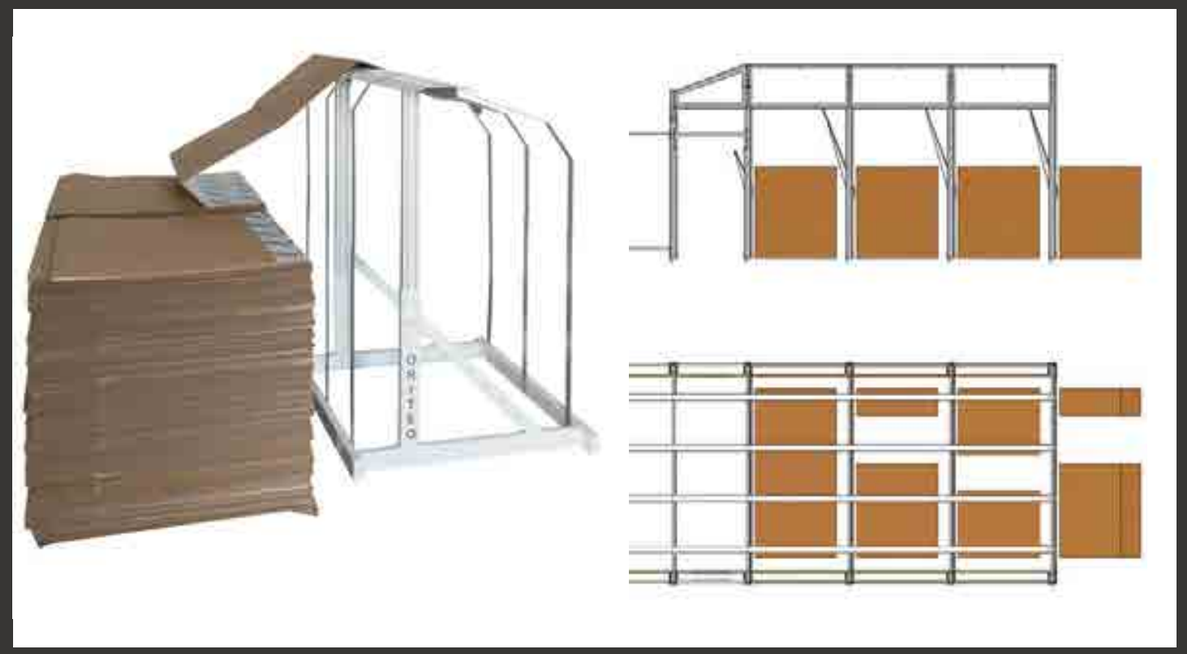

SINGLE FEED

MULTI FEED

REPORTING

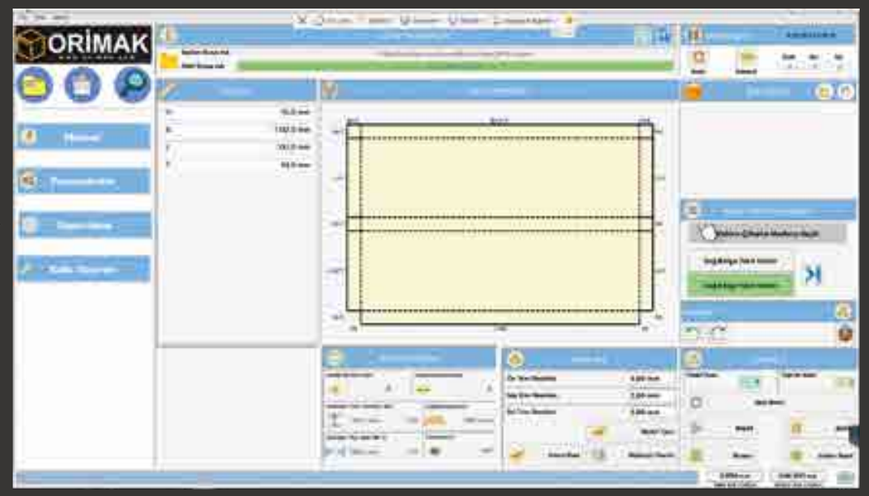

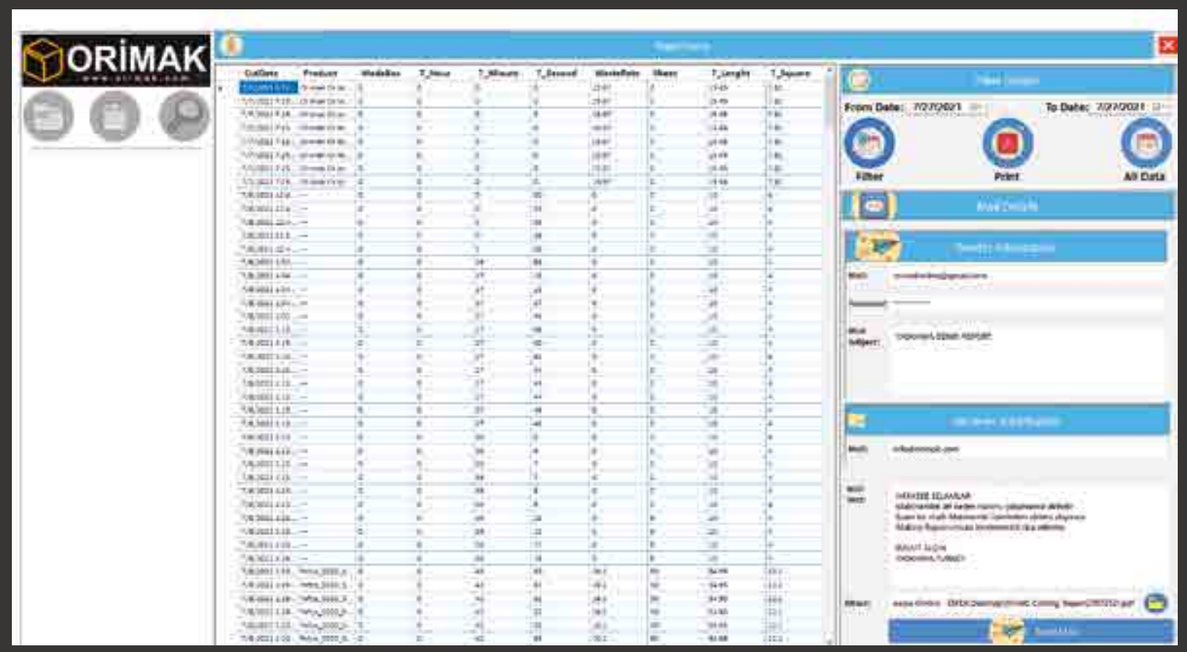

Daily, weekly or monthly detailed reporting

ZONE WORKING OPTIONS

You can choose which zone you want to work in with one click.

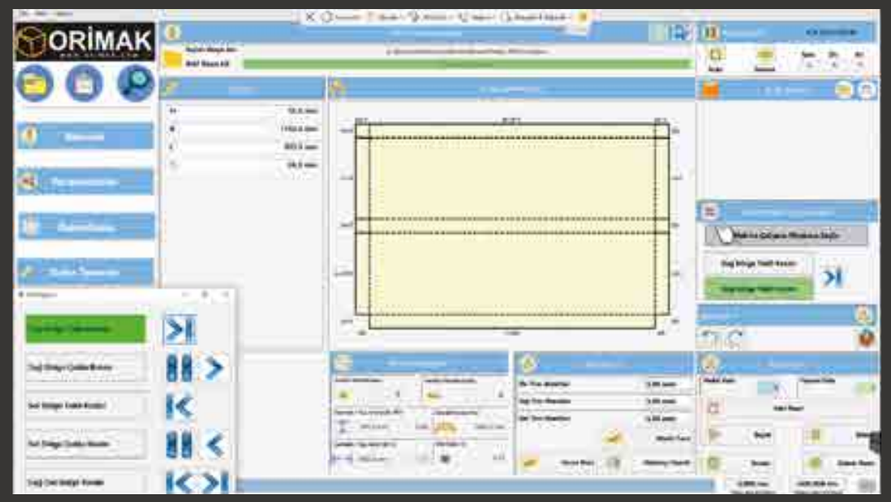

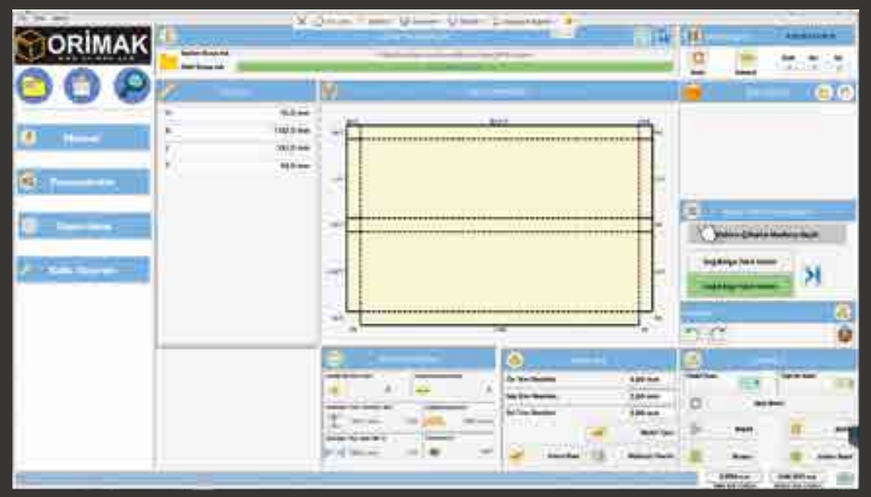

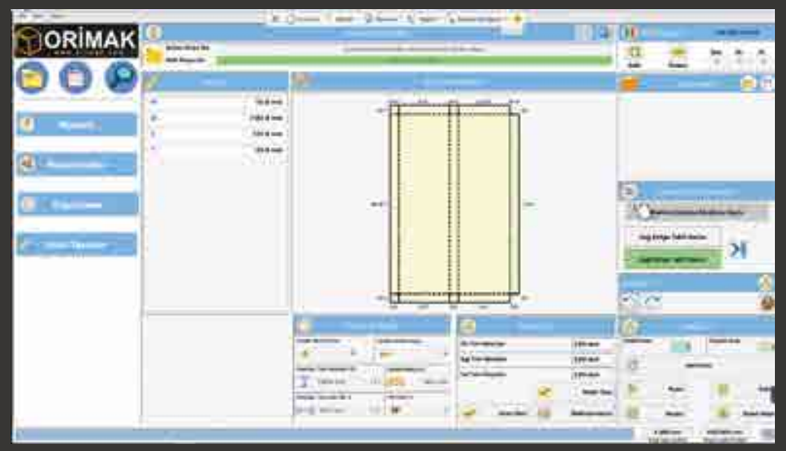

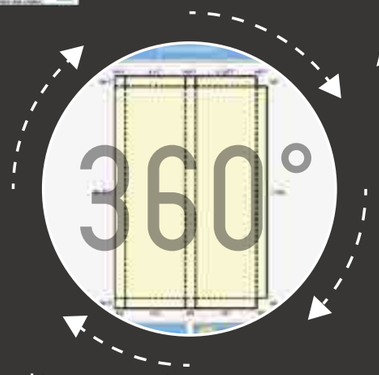

If requested, waste ratio can be reduced by changing the cutting direction of the box, therefore the maximum profit is provided.

OPTIONS

8 Blades standard in vertical, option up to 16 blades

Automatic dimensioning system

OPTIONS

Hand grip (Punch System)

Mini print system

Wireless barcode reader

Label printer

SİSTEMLERİNİN AVANTAJLARI

ADVANTAGES OF Q-BOX SYSTEMS

You can produce special boxes for your products on your demands with Q-BOX. This adds value to your product and prevents damage during transportation. Q-BOX prevents waste of money by eliminating the use of oversized cardboard boxes, the cost of storing unused cardboards and keep from damage of your products. Q-BOX gives you the opportunity to produce 100% sustainable and environmentally friendly products.

Reduce Costs

You will not need to place a minimum order for cardboard boxes. You can produce custom size boxes according to the cardbords in your warehouse. Q-BOX produces made-to-measure cardboard boxes fully automatically and just in time.
Raw materials are used efficiently, thereby saving packaging and filling material in significant amounts.

SAVING TIME AND MONEY

Employees will not waste time no longer while searching for a suitable box for the products to be packaged.

BETTER PROTECTION DURING TRANSPORTATION

You can produce boxes that fits perfectly to every product and thus protects better during transportation.

ORİTEQ®

Q-BOX
Box Cutting

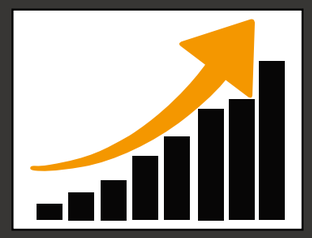

Increases Efficiency

Reduces Labor

Minimizes Damages

Minimizes space Inside the box

Less corrugated cardboard is used

Organizes the Warehouse area

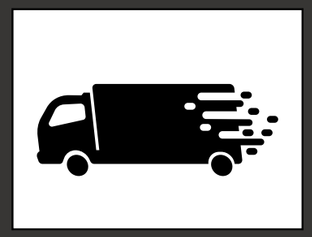

Reduces shipping costs

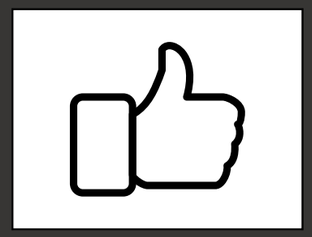

Increases customer satisfaction

Increases Sustainability in Nature

ORİMAK®

TECHNICAL SPECS

Cardboard Width	: Min. 200 mm / Max. 2600 mm 2
Cardboard Thickness	: mm / 3 mm
Boxes / Min.	: 5 - 14
Defined Fefco Box Type	: 80 Different Types
Number Of Vertical Blades	: 8 Standard/ 9-16 Option
Minimum Vertical Distance Between Blades	: 22 MM
Min. Box Height	: 18 MM
Cardboard Feeder	: 1 Standard / 4 Option
Cardboard Feed Type	: Fanfold/Sheet
Feed Speed	: Yatay 60 m/dk (m/min)
Feed Speed	: Dikey 40 m/dk (m/min)
Power Supply	: 2 KW
Compressed Air	: Min 3 bar
Electrical Connections	: 380 - 400V / 50Hz / 3P-1N-1G 10°C
Working Ambient Temperature Software	: (50°F) - 40°C (104°F) ORIMAK
Weight	: 2100 Kg
	:

LAYOUT

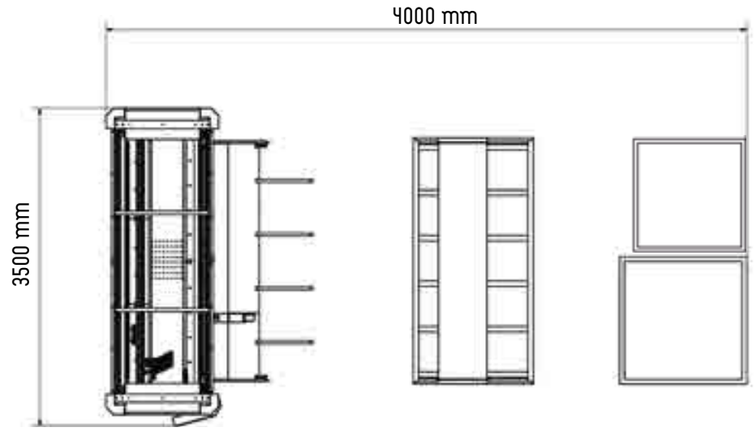

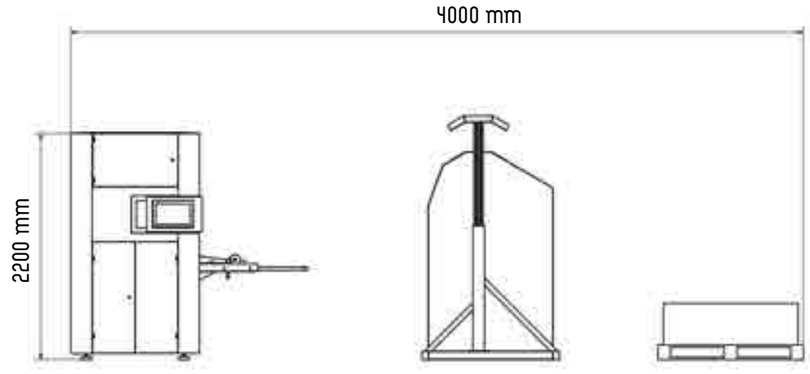

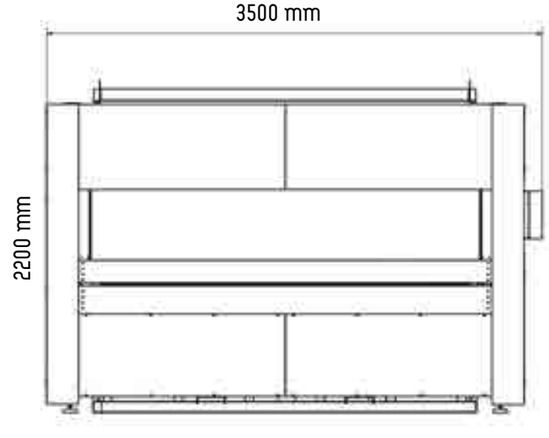

ORİTEQ®

ORİTEQ®

Q-BOX

Box Cutting

Ibay 0 224 715 42 43

AUTHORIZED SALES
FERRERE Sp. z o.o.
ul. Długa 19c, 44-373 WODZISŁAW SLASKI
TAX No: 6472588274

FERRERE

www.orimak.pl